Design and User Manual for UC Davis Chimney Solar Dryer

Improved solar dryer for fruits and vegetables

Horticulture Innovation Lab
University of California, Davis
2017

Summary

The UC Davis chimney solar dryer was designed to provide efficient drying even in hazy or partially cloudy conditions. Constructing the dryer is simple and it can be built from low-cost materials found locally in markets and shops around the world. The objective of this manual is to provide the knowledge needed to build and use the chimney solar dryer, and chalks out the value and process of using the sun to dry fruits, vegetables and other foods. This manual will be useful for growers, farmer cooperatives, trainers, development implementers, researchers, and others. There are two key and unique characteristics of the solar dryer:

1. The chimney ensures continuous airflow around the product, thus increasing the speed of drying compared to other designs and
2. The dryer's large heat-collection area ensures high temperatures and rapid moisture removal.

How to use the manual

The manual has been divided into two main sections:

1. Building the chimney solar dryer
2. How to use the chimney solar dryer

Background

Fruits and vegetables are highly profitable commodities for both small-scale and large-scale farmers. Unfortunately, fresh produce is very perishable and postharvest losses can be quite high, especially in developing countries. The FAO (2011) estimates that roughly one-third of edible products are lost between the growing site and the consumer. In the developing world, the majority of these losses occur soon after harvest. Many fruits and vegetables have production peaks when, for reasons such as season, weather, or planting time, high volumes of produce are harvested in a short period. During these peaks, product quality is often high, but prices are typically low because there is too much product available (Fig. 1). Shortly after the harvest, when the glut of produce has been sold, prices rise. Farmers can take advantage of the higher prices by storing some of their harvest. The primary tool for storing fresh fruits and vegetables is refrigerated cold rooms, which can extend shelf life by several weeks for some crops and up to a year for a few others. Where cold storage is not available or economically justified, good quality excess product frequently goes to waste. Freezing and canning are common strategies for processing peak production and adding value, but may require expensive facilities, often not available to small-scale farmers. An alternative for many crops is drying. In certain cultures, dried fruits and vegetables are a staple part of the diet. In addition to extending the marketing season, drying reduces the volume and weight of products resulting in lower transportation and storage costs.

Figure 1. Typical product supply and price changes over time.

Key Message

Drying fruits and vegetables increases shelf life and opens up new income generating activities for smallholder producers.

What is it?

The chimney solar dryer (Fig. 2) is a solar dryer designed by UC Davis Horticulture Innovation Lab researchers. It is a low-cost structure that can be made from locally available materials, and reduces drying time compared to traditional solar dryers.

Figure 2. Photo of the chimney solar dryer

How does it work?

The dryer comprises of a long table covered with black plastic, which is connected to a chimney at one end. The product is placed on mesh trays along the length of the table. A clear plastic sheet placed over the trays and table creates a tunnel that traps solar energy, heating the air and reducing its relative humidity. The low-humidity, heated air accelerates moisture loss from the heated product, and the warm moist air leaves the dryer through the chimney. The dryer is designed so that there is little space between the black plastic under the product trays and the clear plastic covering them. This forces the air to flow through a small cross-sectional area and generates high air speeds past the product, thereby speeding drying. The essential features are shown in Fig. 3. It is important not to block the opening at the end of the tunnel. If insects or other pests become an issue, you may want to add a screen, but only do this if necessary as it may slow airflow.

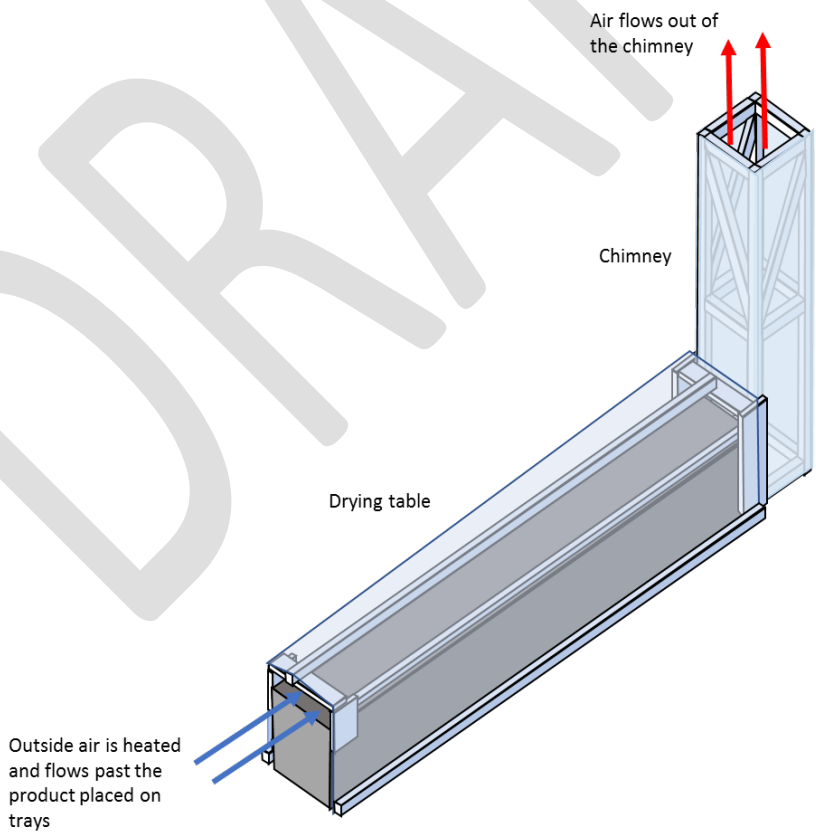

Figure 3. Chimney solar dryer showing key operational features

Advantages of the chimney solar dryer

- Drying is fast and safe
- Easy to build
- Relatively high capacity (approx. 6 kg of fresh product)
- The design can be modified to suit needs of the product and the user

The chimney solar dryer dries about twice as fast as a traditional cabinet dryer does. The trays can be used indefinitely, and only the clear plastic requires periodic replacement when damaged beyond repair. The design is flexible enough to accommodate a variety of products, from whole apricots, to smaller items such as sliced tomatoes or mangoes. The drying trays can be built in varying sizes depending on the product to be dried, as long as the drying table width accommodates the tray size. This type of solar dryer keeps produce off the ground and uses a plastic or covering to protect the product from rain and pests. Fast drying reduces product discoloration and improves flavor and overall visual quality. Adding value through improved solar drying is a proven way to extend the marketing period, diversify and increase income, and enter new markets.

Section 1

Building the chimney solar dryer

This chapter discusses in detail the steps to build a chimney solar dryer using low cost, easily available materials from local markets around the world, including rural areas.

The four main components of the chimney solar dryer

The dryer design has four elements:

1. A drying table covered with black plastic or fabric.
2. A chimney covered with plastic with an opening at the drying table.
3. Mesh-covered drying trays to hold the produce.
4. Clear polyethylene film that covers the trays and the drying table and sealed to the chimney.

Materials needed to build the chimney solar dryer*

	Item description		**Number of pieces**	**Size (Width x Height x Length)**	**Total**
1	Wood for table frame and chimney	A	23	3 cm x 3 cm x 54 cm	12.42
		B	4	3 cm x 3 cm x 3 m	12
		C	4	3 cm x 3 cm x 4 m	16
		D	8	3 cm x 3 cm x 74 cm	5.92
	Diagonal stabilization boards drying table and chimney	E	3	3 cm x 3 cm x 95 cm	2.85
		F	2	3 cm x 3 cm x 1.6 m	3.2
		G	3	3 cm x 3 cm x 1.5 m	4.5
	Total Wood for Dryer Table and Chimney				**56.89**
2	Wood for 10 trays	H	40	2 cm x 4 cm x 60 cm	24
	Total Wood for Trays				**24**
3	Wood or bamboo poles	I	3	Minimum length 4 m	12
	Wood or Bamboo Poles				**12**
4	Table attachment to the chimney	J	2	2 cm x 15 cm x 90 cm	1.8
	Pole support	K	2	2 cm x 15 cm x 30 cm	0.6
	Pole support shelf	L	2	3 cm x 3 cm x 60 cm	1.2
	Wood strips	M	2	2 cm x 4 cm x 4 m	8
	Wood for support and attachment				**11.6**
5	Clear polyethylene greenhouse grade polyethylene plastic, thickness 4 to 6 mil (0.10 – 0.15 mm) - Do not use milky colored PE or PVC plastic.				
	Clear plastic for chimney cover		1	0.10 mm x 2.2 m x 3 m	6.6
	Clear plastic for dryer table cover		1	0.10 mm x 4 m x 3 m	12
6	Black plastic or fabric to cover dryer table (thicker is better)		1	6 m long x 2.7 m wide	16.2
7	Food grade plastic/metal mesh for 10 trays – 60 cm x 60 cm each		1	Minimum width of 60 cm, minimum length of 6 m	0.36

*Quantities may vary depending of the size of your chimney solar dryer. These materials are to build a dryer with a 4-meter long table and 3-meter high chimney.

**The above materials are calculated based on the actual dimensions. It is suggested to buy 10 percent extra material to account for any unforeseen situation or issues.

Instructions

The dryer dimensions can be changed to meet various capacity needs. In this manual, all instructions are for a 4-meter long table and 3-meter high chimney**.** This design uses 60 cm x 60 cm trays, because the frame is 60 cm wide, you can fit 5 trays (or 10 in stacks of 2) on a 4-m long frame. The chimney is always 60 cm deep and as wide as the drying table.

Site selection: A full-sized dryer, using the design in this manual will be 4 m long. Enough flat area with good sun exposure is needed to take full advantage of the dryer. The opening of the dryer should always face the equator, this means facing south in the northern hemisphere and facing north in the southern hemisphere. Select an area where trees do not shade the dryer. Make sure the ground is cleared of tall grasses, and the area is relatively free from roaming animals

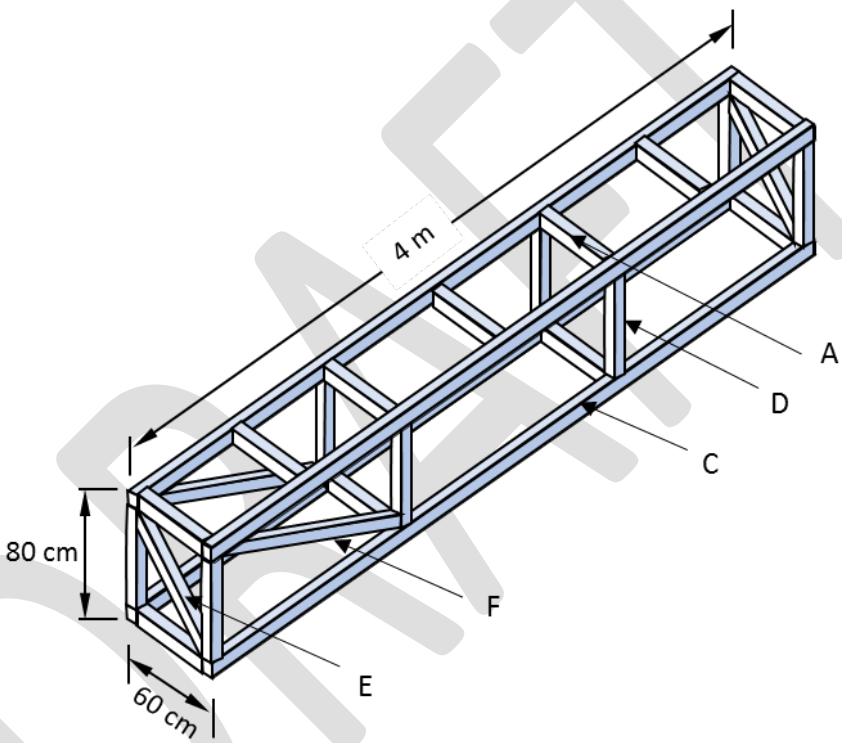

Figure 4. Wood frame for chimney

Building the frame for the table: The drying table is the core of the dryer; it holds the trays and is attached to the chimney (Fig. 4). The frame can be built from scratch or you can use an existing table or other similarly shaped structure. For a 4 m dryer, the frame will be 4 m long, 80 cm tall and 60 cm wide. Using the materials listed above; build a sturdy frame of wood that can support the weight of the trays filled with product. We like to use the 54 cm pieces (shown in Fig. 4 as A) as slats across the top to support the trays. The black non-woven fabric or plastic sheet is then stretched over the top and sides of the frame and secured with staples.

Building the chimney: The chimney is made from four planks of wood (3 m x 3 cm x 3 cm; shown in Fig. 5 as B). Make sure that the chimney rises 2 m above the top of the drying table (Fig. 5). For instance, if your drying table is 80 cm tall, then your chimney poles should be 2.8 m tall. The chimney must be as wide as the drying table and 60 cm deep. The chimney can be anchored to the ground with stakes. Cover the whole chimney frame in clear plastic, leaving the top open.

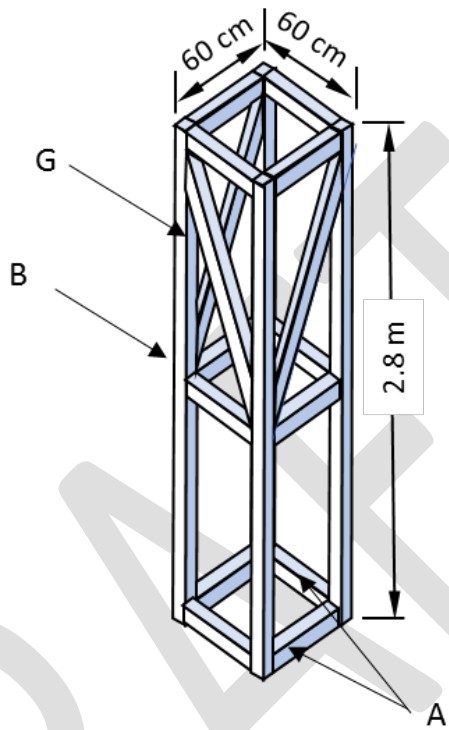

Figure 5. Wood frame for chimney

Putting the pieces together: Cut the chimney opening in the form of a rectangle, opening the entire area above the drying table and below the support for the 4-m pole (Fig. 6). Air will flow over the product, through this opening and out the chimney. Attach the table to the chimney with two vertical boards (approx. 90 cm x 10 cm) and screws (Shown in Fig. 6 as J). After the clear plastic has been draped over the dryer, and over a 4 m pole that holds the plastic above the trays of product, you need to secure the long ends of the plastic to the ground with a heavy pole. Attaching the plastic to a pole allows it to be rolled up and lifted off the dryer, providing easy access to the product when it is dry. Press the clear plastic tightly against the two vertical boards that join the table to the chimney. This prevents air from short-circuiting the drying table and entering the chimney.

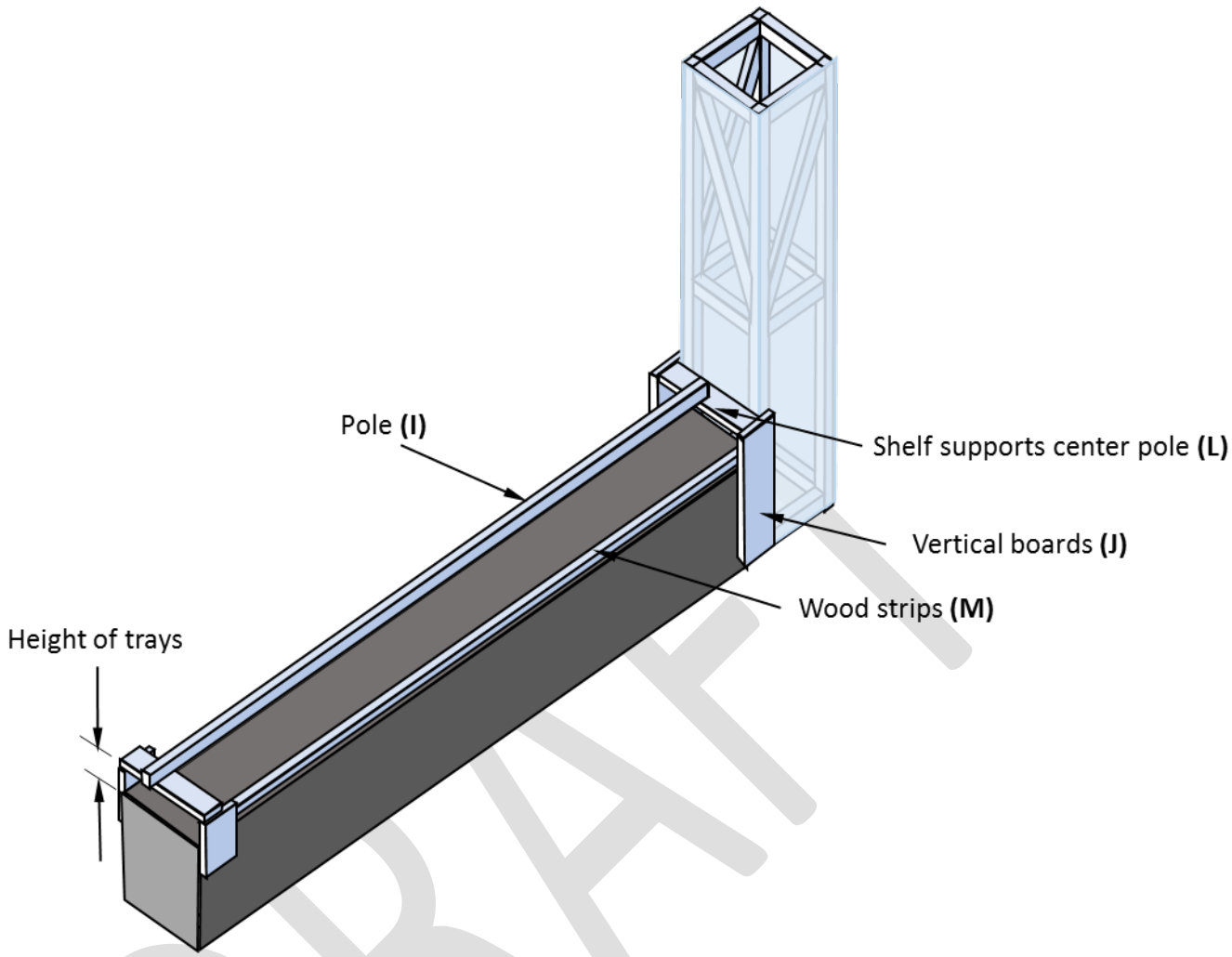

Figure 6. Sketch of the chimney attached to the drying table.

Notes:
1. Build chimney and drying table separately.
2. Cover all sides of drying table with black plastic.
3. Cover sides and bottom of chimney with clear plastic.
4. Attach chimney to drying table with vertical boards.
5. Cut away clear plastic above drying table and below shelf that supports plastic cover.
6. Attached two strips to lift trays above the drying table.
7. Stabilize chimney with stakes at four corners and attach guywires or rope to top of the chimney in windy areas.

Building the trays: Use the 60 cm long wood strips to make the trays (Shown in Fig. 7 as H). Each tray will use 4 pieces (60 cm each side), one on each side. By joining the wood stacked as shown in Fig. 7, you will use less wood and still get good airflow. Pre-cut the mesh and staple it to two strips opposite each other, pull them apart, tightening the mesh, and secure the other two strips of wood, assuring the corners are at right angles and the overall tray is square. Staple along each edge to secure the mesh to the wood. Trim the edges of the mesh if needed (Fig. 8).

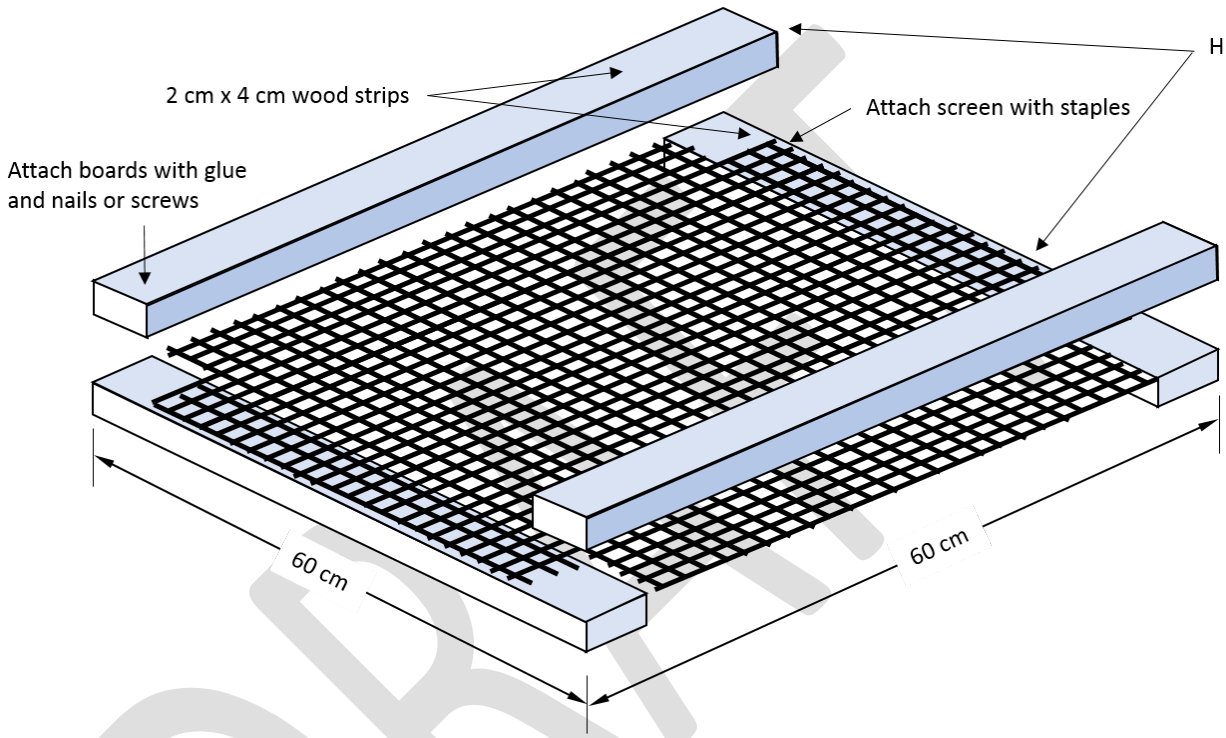

Figure 7. Expanded view of a drying tray

Figure 8. Construction of trays

Before you cover the dryer with plastic: Make sure that the desired number of trays fits on the frame; trays can be stacked one or two high shown in Fig. 9. If the trays are stacked, make sure that the product on the bottom tray does not touch the tray above. The clear plastic film will then be draped over the drying table. The clear plastic is held above the top trays with the 4 m wood or bamboo pole positioned just above the top tray (Fig. 10).

Figure 9. Wood or bamboo pole positioned just above the drying table

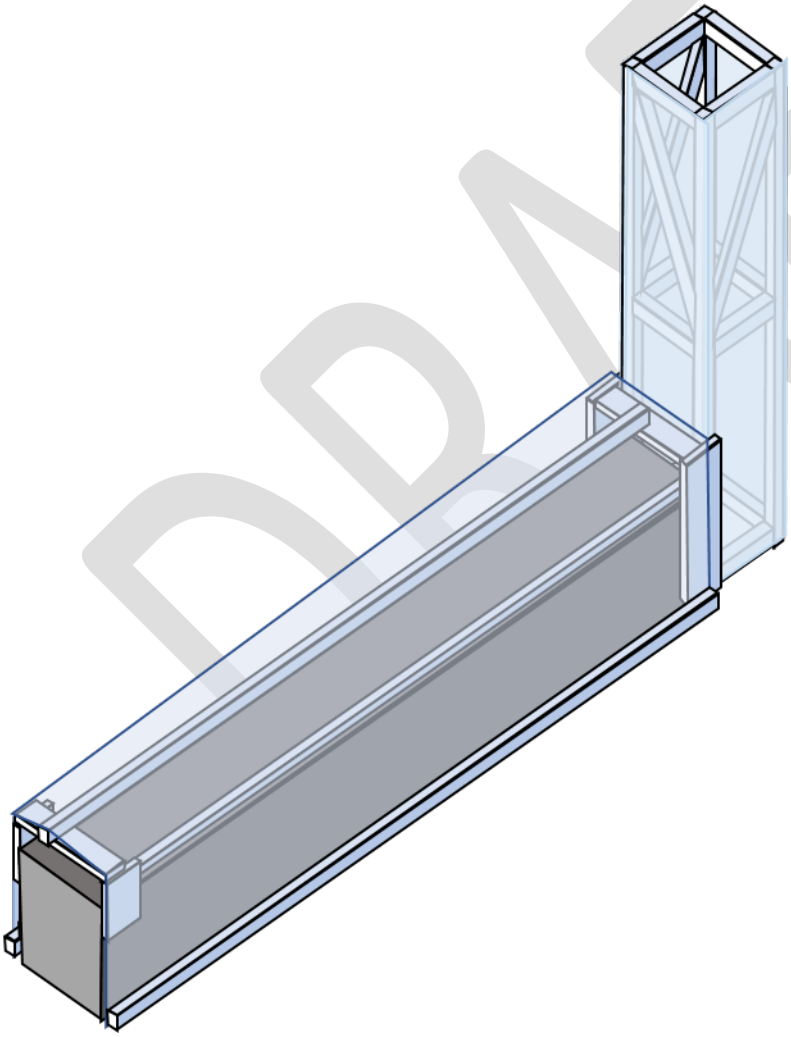

Figure 10. Clear plastic wrapped around the table

Common problems in building and using the chimney solar dryer

Limited airflow across the drying trays: Ensure the clear plastic is sealed tightly to the wood shelf above the opening to the chimney and sealed tightly to the drying table near the chimney (Fig. 11-14). There are two simple option to check airflow in the dryer. Look at the shadow of the top of the chimney. When air is flowing, you will see a shimmer just above the chimney shadow. Another option is to hang 0.5 x 7.5 cm strips of tissue paper from the pole in the middle of the drying table. When air is flowing, these strips will move with the flowing air. The height of the pole above the trays should not be more than 5 cm, as it will reduce the air speed in the tunnel.

Figure 11-14. Chimney window opening and shelf support at both ends of the table.

Trays oriented incorrectly on the drying table: The airflow above and below the tray is imperative; orient accordingly. If the products on the lower tray are touching the above tray, it will block the air to flow through the products and it will take longer to dry the products. Overloading the trays with fruits and vegetable can also slow down the drying rate.

Blockage at the front of the drying table: Ensure that the clear plastic is open at the front of the dryer (Fig. 14) so that air can flow into the dryer. An open mesh screen can be used to cover the air inlet to keep animals out if needed. Insects are usually not a problem, as they are not attracted to the fruit during drying due to the airflow.

Remove the spark edges: Ensure to remove all sharp edges of the pole support and shelfs before putting the clear plastic over the drying table.

Section 2
How to use the chimney solar dryer

Drying fruits and vegetables: Once the dryer has been built, you are ready to add your product.

Test the dryer: We recommend giving the dryer a test run to make sure all the pieces fit well together, that there are no air leaks or gaps in the plastic, and to measure the temperature (if possible) at different locations within the dryer table. If the dryer is working well, strips of tissue paper hanging from the center pole under the clear plastic will flutter, the tunnel roof will be concave (due to suction from the chimney), and you will see shimmering at the top of the chimney's shadow.

Figure 15. Chimney solar dryer, ready for use.

Preparing the product for drying:
Produce should be rinsed in clean water prior to drying (if dried whole) or cutting. Bulky products dry faster if they are cut into pieces prior to drying. It is best to begin the drying process in the morning to give the maximum drying time before sunset.

Figure 16. Wash and cut in the products before putting them on the trays

Preheat area:
The first tray space (that furthest away from the chimney) should be left empty (Fig 17). Leaving the first tray space empty allows the air to heat before it contacts the product.

Figure 17. Trays laid on the chimney dryer table with preheat space towards the front of the table.

Product size:
Thin items like herbs and leafy greens may dry in a few hours, while large products like whole apricots or whole bananas will require several days to dry. You can decrease drying time by removing pits, peeling the product, and/or cutting it into thin (6 mm) slices. Some modified version of the chimney solar dryer are shown in Fig. 18-19.

Figures 18-19. Modified version of Chimney Solar Dryer used in Uzbekistan for drying raisins

Loading the trays: Load the trays with whole or sliced products (fruits and vegetables) (Fig.20). The pieces can overlap slightly because they will shrink as they lose moisture. Make sure the tray is not too heavy to lift.

Tray rotation: Rotate the trays as needed. Move the trays closest to the chimney to the air inlet end of the dryer and the trays next to the inlet to the position next to the chimney. Switch the bottom tray with top tray if trays are stacked. By rotating trays and leaving an open preheat area you will get a more uniform product moisture content.

Consideration. The clear plastic that covers the trays should not touch the fresh product; this may cause burning or incomplete drying. The plastic should be as taught as possible, creating a tent over the product and trays. Make sure that there is plenty of airflow through the dryer, especially above and below the product. Remember, ambient air enters and quickly warms up and dries. Warm, humid air exits through the chimney.

Figure 20. Chimney solar dryer used to dry fruits in Bangladesh

Conditions that affect dryer performance

Air temperature

High air temperature speeds drying. However, air temperature must not get too hot or it could damage the product. Excessively high air temperature results from too little airflow. Make sure the opening at the front of the drying table and the chimney opening is not obstructed. The clear plastic cover should not touch product.

Maximum air temperature during drying of most fruits and vegetables should be in the range of 60 – 65°C (140 – 150°F). Cabbage and onions should not be dried at temperatures above 57°C (135°F). Grains and most nuts should not be dried above 54°C (130°F) with the exception of walnuts that should not be dried above 43°C (110°F). Air temperatures above these recommendations cause quality loss, such as darker

color or decreased storage life. Test products in the dryer to be sure of the conditions they require for best quality. Operators should regularly monitor air temperature in the drying area. An inexpensive dial thermometer works well for this purpose.

Solar radiation

Direct radiation on the top trays will result in faster drying than product on the lower trays. More uniform drying can be achieved by rotating tray positions once or twice during the drying process. Rotating trays is also beneficial because exposure to direct solar radiation may cause bleaching of some items and this light color may or may not be desirable by consumers. Product on the top tray may be exposed to excessive heating, which usually causes quality loss. In addition to rotating trays, the top trays can be covered with a light colored fabric to partially shade the product.

Airspeed

Faster airflow increases the rate of moisture loss from the product and speeds drying. Make sure the air entrance is not blocked or covered in any way. A few centimeters of headspace over the fruit is enough to provide for the free flow of air and allow for air to heat up. If the plastic covering is too high above the trays, air speed will be slowed and drying times will increase.

Humidity

When the relative humidity of the ambient air is low, drying speeds are faster. Heating of the air from solar radiation further reduces its relative humidity. Even in locations with high ambient relative humidity, the dryer heats the air enough to produce the low relative humidity levels required for rapid drying.

Amount of product on trays

Adding more product (by weight) to the trays increases the overall amount of fruit dried per drying cycle, however, it also increases the length of the drying cycle. Users should experiment with the product load to determine what works best under their conditions. Light tray loadings associated with drying of flowers or herbs (less than 2.5 kg/m^2 (0.5 lbs. /ft^2) will dry in less than one day. The dryer has been modified by some users to dry grapes in bunches, producing equivalent tray loadings of more than 50 kg/m^2 (10 lbs. per ft^2). In preliminary experiments, complete drying was achieved in about 5 to 7 days.

Product size

Thin items like herbs and leafy greens dry in a few hours and large products like whole apricots or whole bananas will require more than one day to dry. You can decrease drying time by removing pits, peeling the product and/or cutting it into thin pieces.

Stacked trays

The dryer can be used with two or more trays stacked on top of each other (shown in figure 21). Because air temperatures are higher at the top of the drying table, the top trays will dry faster than the lower trays. Rotate tray positions once or twice during the drying process. Rotating trays may also reduce bleaching, an effect of direct solar radiation that may not be desirable. Bleaching may also be reduced by covering the top trays with a light shade cloth.

Figure 21. Spacing between the top and bottom tray is important for airflow

Adverse weather conditions

The dryer works in cloudy-bright to sunny conditions; and even occasional rain showers are not a problem. However, drying should not be attempted during periods of continuous rain or heavy clouds.

Storing dried product

Properly dried fruits and vegetables can be stored for several months to a year. Dried products should be stored in a cool, dry and dark area. After drying, the produce should be allowed to cool and then packed into dry, airtight containers or sealed plastic bags. Do not be afraid to pack the product tightly together. Storing at cool temperatures increases storage life of dried products.

How dry is dry enough?

The moisture content of fresh produce ranges from 20 to 90%. Each type of crop requires a different level of dryness for safe storage, as shown in Table 1. High sugar content fruit should be dried to approximately 20% moisture content; this means that the fruit will still be pliable and not breakable like a twig. Vegetables, on the other hand, should be dried to less than 10% moisture. A properly dried vegetable will be brittle and will snap if bent.

	Moisture Content (% Wet Basis)	
Food	Initial	Desired
Rice	24	14
Maize	35	15
Potatoes	75	13
Apricot	85	18
Coffee	50	11

Table 1: Moisture Content of important crops

The best method of determining safe product moisture content for storage is to measure the relative humidity of the air in the dried product storage container; it should be less than 65%. Mold will not grow below this relative humidity. The least expensive method for measuring relative humidity is with a test strip. The DryCard™ described below is a convenient tool based on humidity indicator paper for measuring relative humidity inside storage containers (as shown in Fig. 22).

Figure 22. DryCard is a convenient tool to measure relative humidity of a dried product

DryCard™ indicates food dryness

The DryCard™ is an inexpensive device developed by UC Davis researchers for determining if dried food is at a low enough moisture content to prevent mold growth during storage. Moldy food has a bad taste and may be contaminated with harmful toxins. Molds will not grow if the air surrounding the product is lower than 65 percent relative humidity.

How does DryCard work?

The DryCard™ incorporates a cobalt chloride humidity indicator strip that changes color with changing relative humidity. The DryCard™ is based on the concept that relative humidity of air around a product reflects the moisture content of the product. (This concept is called equilibrium relative humidity).

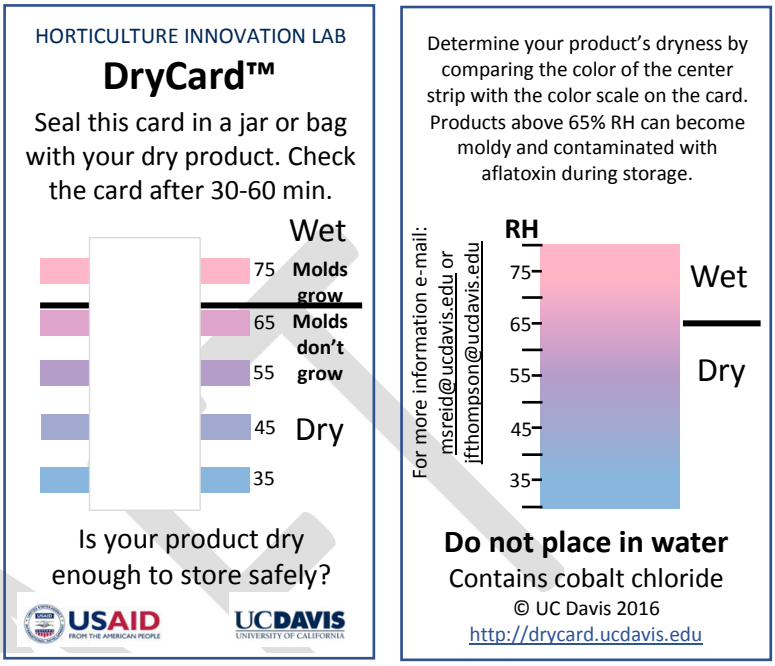

Figure 17. Front and backsides of the DryCard

How to use a DryCard

Place the DryCard™ and a sample of the dried product in a moisture tight container, such as a sealed plastic bag or a jar. The card will display a measure of the relative humidity within the sealed container in approximately 30-60 minutes. If the indicator strip on the card turns pink, then the product is too wet for safe storage. If the strip turns blue or grey (above the line on the card), then the product is adequately dried (Fig. 17).

Caution testing moisture content of products that have just been dried

If a food product has just been removed from a dryer, it will take time for the moisture content to equalize within the product, thus allowing an accurate measurement of its equilibrium relative humidity. Immediately after drying, products will have an overly dried surface but more moisture inside, giving an erroneously low equilibrium relative humidity estimate. For example, rice must be held for about 4 hours after being removed from a heated air dryer before the relative humidity of the air around the rice reflects its true moisture content. Larger diameter products take longer to reflect their moisture content after drying. For example, large tree nuts require about 24 hours of moisture equalization before an accurate measurement can be taken. Determine moisture equilibration time by placing a DryCard™ with a dried sample just after removal from a dryer and observe how much time is needed for the card to reach a constant color. The equilibration time can be shortened by chopping the product into small pieces. If the DryCard™ indicates the product is too wet to be stored safely, then the product should be used immediately or dried further before storage.

DryCard™ is reusable: A DryCard™ can be reused many times. Store the card in a plastic bag to prevent accidental contact with water which will make the card difficult to read and less accurate. The humidity strip contains cobalt chloride. Do not remove the strip from the card or leach the cobalt chloride by placing it in water.

Additional resources on drying fruits and vegetables

1. Chapter 13 in "Small-Scale Postharvest Practices: A Manual for Horticultural Crops"

   URL: http://postharvest.ucdavis.edu/files/230094.pdf

2. Dried fruits and nuts from the UC Davis Postharvest Technology Center info sheet

   URL: http://postharvest.ucdavis.edu/Commodity_Resources/Fact_Sheets/

3. New Zealand Department of Agriculture "Solar Drying of Fruits and Vegetables"

   URL: http://www.nda.agric.za/docs/solar/solardrying.htm

4. FAO "Producing solar dried fruit and vegetables for micro-and small scale rural enterprise development: Assessing opportunities for a fruit drying business."

   URL: http://teca.fao.org/read/4501#sthash.CoTaU46T.dpuf

5. Solar drying of mangoes: preservation of an important source of vitamin A in French-speaking West Africa

   URL: https://www.ncbi.nlm.nih.gov/pubmed/18502231

6. Concentrated solar drying of tomatoes

   URL: http://ucanr.edu/datastoreFiles/234-2682.pdf

7. Maintaining nutrition quality

   URL: http://ucanr.edu/datastoreFiles/234-2154.pdf

8. Resources from the ECHO Community Global Network

   URL: http://www.echocommunity.org/search/all.asp?bst=solar+drying

9. UC Davis D-Lab 2011 "Guide for Solar Fruit Drying in Totogalpa, Nicaragua"

   URL: http://ucanr.edu/datastoreFiles/234-1959.pdf

10. GTZ guide for solar drying

    URL: http://www.fsnnetwork.org/sites/default/files/solar_drying_technology_for_food_preservation.pdf

11. Humidity test strips

    URL: https://www.microessentiallab.com/ProductInfo/F30-SPLTY-HUMIDI-SRD.aspx